Tagra | PISOC13 | Plaster In | 13.2x11mm | LED Profile | Silver Channel | Semi Clear Diffuser | 3M

4822SCD-3M / ITM002224

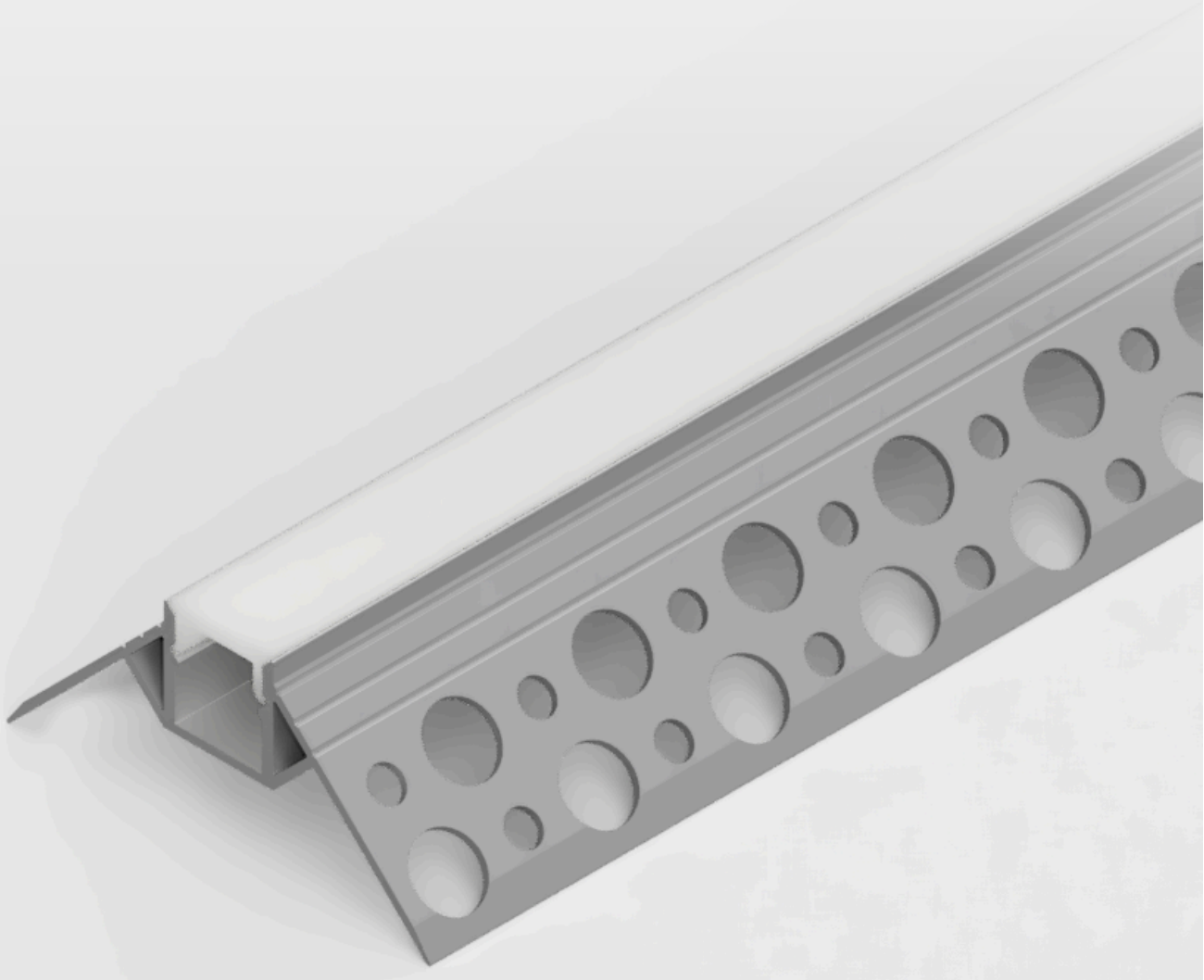

Datasheet

12-11-2026

Tagra | PISOC13 | Plaster In | 13.2x11mm | LED Profile | Silver Channel | Semi Clear Diffuser | 3M



IP Rating	Lit Surface	Max Width	Mounting	Warranty
IP20	10mm	10mm	Multi	5 Years

SKU: 4822SCD-3M
ITM: ITM002224

Key Features:

- **Dimensions (mm):** 51mm x 22mm x 3000mm
- **Body Colour:** Silver
- **Diffuser Colour:** Semi Clear
- **Dimensions (W x H x L):** 51 x 22 x 3000mm

Mechanical Data			
Body Colour:	Silver	**Diffuser Shape:**	Flat Diffuser
Illuminated Surface Width:	10mm	**Max. LED Strip Light Width:**	10mm
Min. Pitch for Diffusion:	140	**No. of Rows for Non-Spotting:**	1
Product Weight:	857g	**Dimensions (LxWxH):**	3000 x 51 x 22mm

Photometric Data			
Beam Angle:	114°	**Diffuser Colour:**	Semi Clear
Diffuser Finish:	Semi Clear		

Environmental Data			
Body Material:	Aluminium	**Ingress Protection (IP):**	IP20
Mounting Type:	Plaster In, Recessed		

Efficiency Data

Energy Efficiency Class:	B

Dimension Drawing

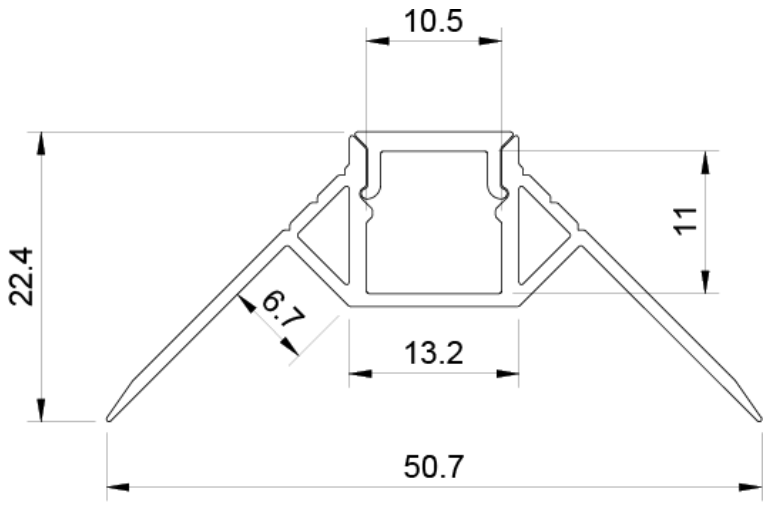

Packaging Data

Items / Sets Per Pack:	1	**Packaging Height:**	23mm
Packaging Length:	3000mm	**Packaging Width:**	51mm
Packaging Weight:	893g		

Disclaimer

Tagra Lighting have taken reasonable care to ensure that the information in this datasheet is accurate at time of publication however it should be noted that all specifications are subject to tolerance. Descriptive specifications such as colour are subjective. Tagra Lighting reserve the right to update specifications without notice. The information in the datasheet may only be relied on by customers of Tagra Lighting in accordance with applicable terms and conditions.

Tagra Lighting is a trading name of T.R Ventures Limited, a company incorporated in England with registered number 07757720. Our registered office is Unit 2, Southfield Industrial Estate, Trafford Park, M17 1SJ.

www.tagra-lighting.co.uk

support@tagra-lighting.co.uk